A Novel Integration of Power Electronics Devices for Electric Power Train

Vishal S. Parekh
Department of Electrical Engineering, Faculty of PG Studies & Research In Engineering & Technology,
Marwadi Education Foundation's Group of Institutions, Rajkot, India
parekhvishal1988@gmail.com

***Abstract*— recently lot of research and development work is being carried out for devices of power train for Electrical Vehicle (EV). This paper proposes novel integrated use by selection of different power train element of EV. Main elements of power train of EV are power source, dc/dc converter, dc/ac converter, motor and its drive. There are different device for each power train element. Aim is to select dc/dc converter to reduce ripple, which have higher voltage gain, and to make selection of inverter like square wave inverter or PWM inverter, and select motor like BLDC or PMSM and motor control method like Field Oriented Control (FOC), Scalar control method; which will affect size, efficiency, cost and performance of EV. A novel integration of power electronics device for electric power train of electrical vehicle is presented in this paper and simulated in MATLAB/Simulink.**

***Index Terms*—Electric power train, Dc-Dc Converter comparison, PWM inverter for ETP, Field Oriented Control for ETP.**

I. Introduction

Importance of Electric Vehicles (EV) is rising due to awareness of environmental concerns like air and noise pollution in public domain. EVs are capable to reduce both air and noise pollution because they can work on clean energy and they don't make noise as mechanical engine does. However, there is lot of scope of development in EVs specially, in its power train which is built up from power electronics devices of various types and ratings.

There has been lot of research being carried out in the area of dc/dc converter, dc/ac converter and motor drives [1]-[2]. Major part of the research is conducted to improve efficiency, power quality of output side and input side; while in motor drives, most of the research is carried out for better close loop control and methods like field oriented control and direct torque control etc. were developed. For electric power trains, there are lots of options to select various elements. Various combinations can be made to build electric power train (EPT) from recent research work about dc/dc converter, dc/ac converter and drives [3]. Combination of these devices should make power train very efficient and superior in terms of reduced harmonics contents, smooth and better control of motor, reduced losses at converter side, etc. One of the novel combinations of power electronics devices for electric power train of electric vehicle is developed in concern with harmonics contents, voltage gain, and speed control of motor with drive.

The main focus of the present paper is on integration of dc-dc converter, dc-ac converter in the motor drive. Each converter topology has its advantages and limitations. For example, the dc/dc boost converter does not meet the criteria of electrical isolation. Moreover, the large variance in magnitude between the input and output imposes severe stresses on the switch and this topology suffers from high current and voltage ripples and also higher volume and weight. Dc-dc converter is used to boost the voltage in power train. BC, MDBC, IBC and MIDBC are compared here [3][13].

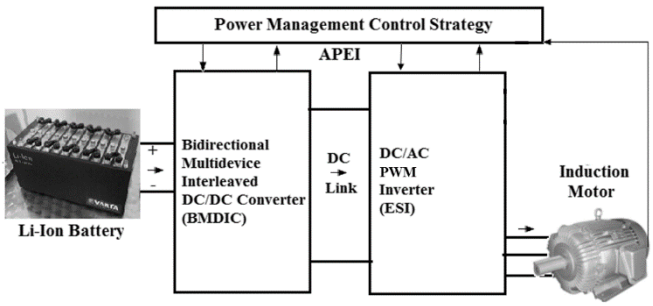

Fig. 1. Electric Power Train [4]

Inverter is a power electronic equipment, which can convert dc electricity into ac. especially in electrical vehicles, the main function of inverter is to provide supply to the motor. There are various types of inverter available, wherein the PWM type inverter is proposed here as main building block [5-7]. Main advantage of PWM inverter is that, harmonic of output ac voltage can be controlled and its frequency can also be controlled, as in electrical vehicles, reduction of 3rd and 5th harmonics is essential to reduce the torque ripples [8]. To control EVs using field oriented control or direct torque control methods, change of frequency at output of inverter is required, which can be achieved by using three-phase PWM inverter [15].

In comparison of scalar control and vector control, scalar control is different technique like AC voltage controller, V/F controller, rotor resistance [14] controller control speed of induction motor and in vector control technique like field oriented control (FOC), direct torque control (DTC) are used to control induction motor. Most of these control technique requires inverter to feed voltage to the motor. There are several advantages and disadvantages of scalar control and vector control both [9][10].

II. DC-DC Converter For Electric Power Train

$$L_b = \frac{(1-D)^2\, DR}{2f} \quad (1)$$

$$C_{min} = \frac{DV_0}{V_r R f} \quad (2)$$

Equations (1) and (2) [11], are used to select L and C volume of boost converter. The ripple value of voltage and current are depend on switching frequency and L and C volume of boost converter. Losses are occurred in inductor and capacitor and its size is depended on which value of ripple

voltage and current selected. The boosting of voltage of boost converter is depended on mainly duty cycle. The selection of DC-DC converter is made for EPT based on reducing the value of L and C, reducing ripple amplitude and increasing ripple frequency across load so that L and C value of boost converter can be reduced according (1) and (2).

(a) Light weight.
(b) High efficiency.
(c) Small volume.
(d) Low electromagnetic interference.
(e) Low current ripple drawn from the Fuel Cell or the battery.
(f) The step up function of the converter.
(g) Control of the DC/DC converter power flow subject to the wide voltage variation on the converter input and output [3][12].

Above advantages can be achieved by using multi device interleaved boost converter (MDIBC). Different types of boost converter are simple boost converter (BC), interleaved boost converter (IBC), multi device boost converter (MDBC). Following is the comparison of RLC value of boost converter.

Converter Topology	L (μH)	R_L (mΩ)	C	R_c (mΩ)
BC	750	68	550	0.697
MDBC	375	34	275	1.394
IBC	375	34	320	1.15
MDIBC	187.5	17	160	2.3

Table. 1. Comparison of Different Converter Topology

IBC converter simulation is presented which shows value of R, L and C can be reduced up to half of value of same voltage rating of boost converter which shows the losses can be reduced and efficiency can be approved using IBC. But MDIBC reduced R, L, C value up to 4 times of normal boost converter and two times of IBC and MDBC which shows it is most efficient device to use for DC-DC converter in electric power train and voltage range of output is double of IBC output voltage so, voltage control can be done at MDIBC if control strategy of motor is requires voltage control at DC-DC converter side [3].

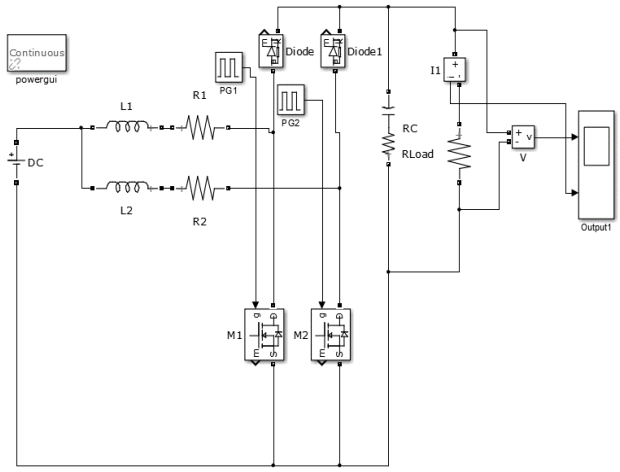

Fig. 2. Simulation of IBC.

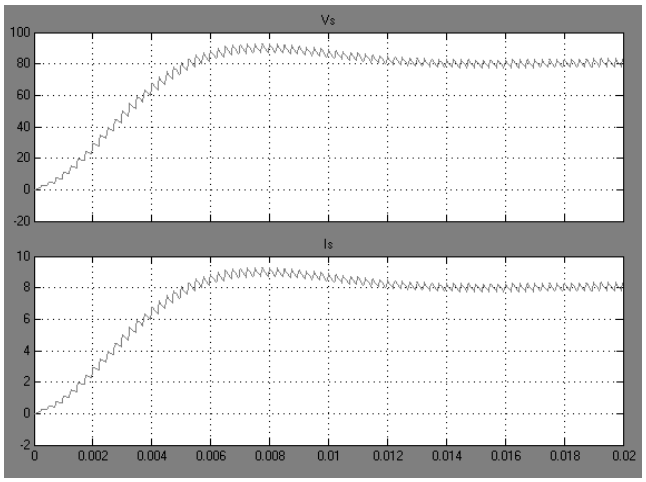

Fig. 3. Voltage & Current Output of IBC

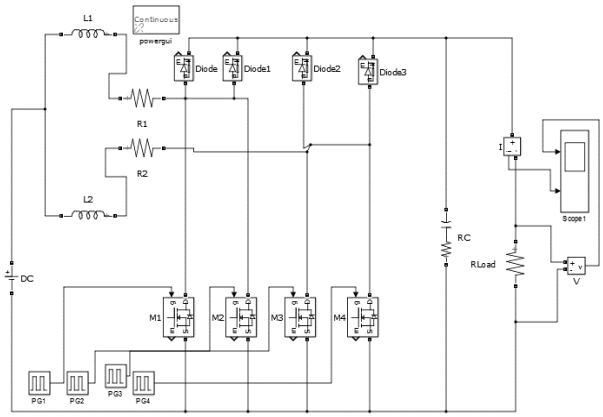

Fig. 4. MDIBC Simulation Diagram

MDIBC keeps more number of switches then IBC but its voltage gain is double then output of IBC. So, as EPT needs wide variation of the voltage and requires less amount of ripple amplitude and high amount of ripple frequency [9]. MDIBC is comparatively good choice for EPT.

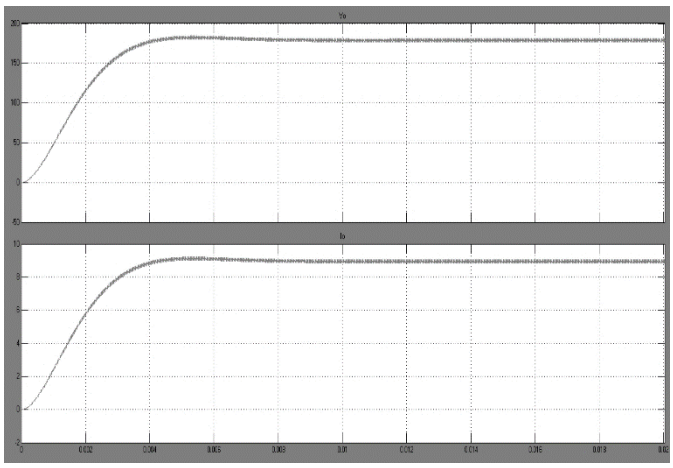

Fig. 5. Voltage & Current Output Waveform of MDIBC

III. Inverter For EPT

Three phase inverter is used to feed induction motor of EPT. Torque ripple are most affected by lower order harmonics like 3rd, 5th and 7th. PWM inverter presented here should reduce lower order harmonics to improve performance of induction

motor drives. Inverter should able to change its output voltage up to some extent

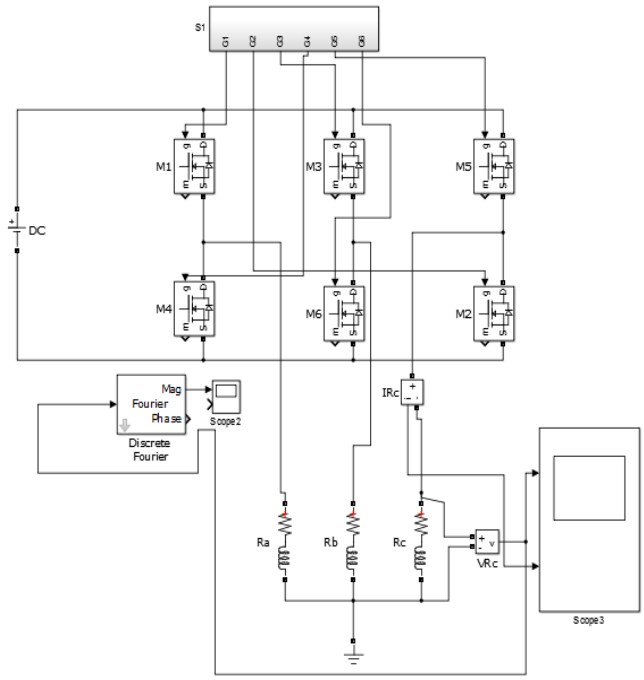

Fig. 6. PWM Inverter Simulation

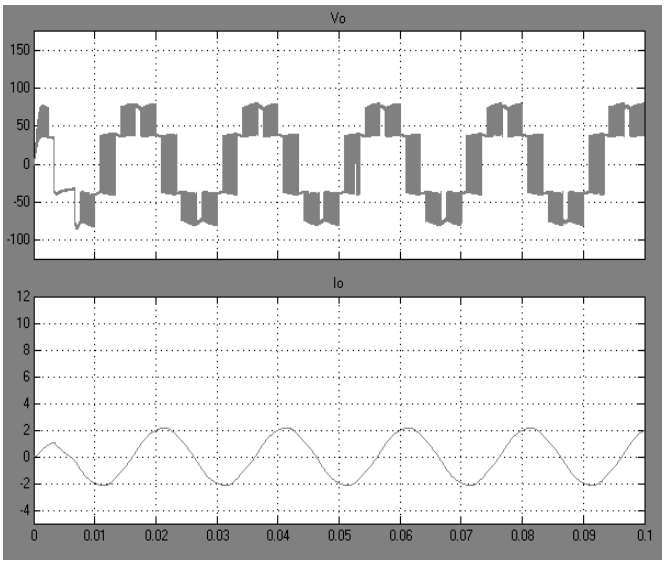

Fig. 7. Waveform of PWM Inverter

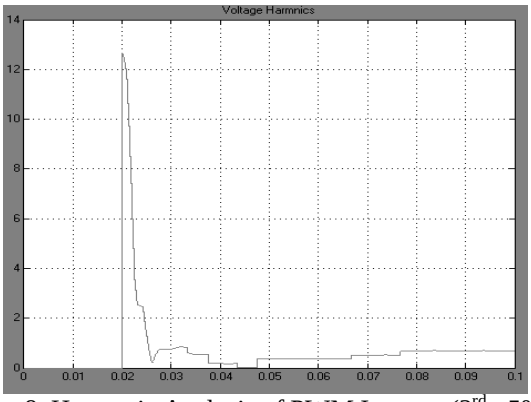

Fig. 8. Harmonic Analysis of PWM Inverter (3rd <5%)

This perticular inverter uses sinusoidal PWM technique to converter DC to AC. 3rd harmonic level of output voltage is far more less then 5%. That helps to reduce torque ripple of motor in considerable level.

Higher order harmonics are present in this inverter and their does not effect much in torque ripple because motor time constant is very high and this inverter uses high frequency of 20K. because of use of MOSFET switching loaases are less.[16]

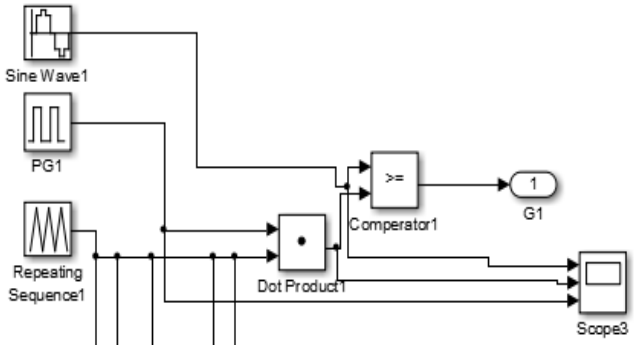

Fig. 9. SPWM Stratergy Showen For One Of The Switch[17]

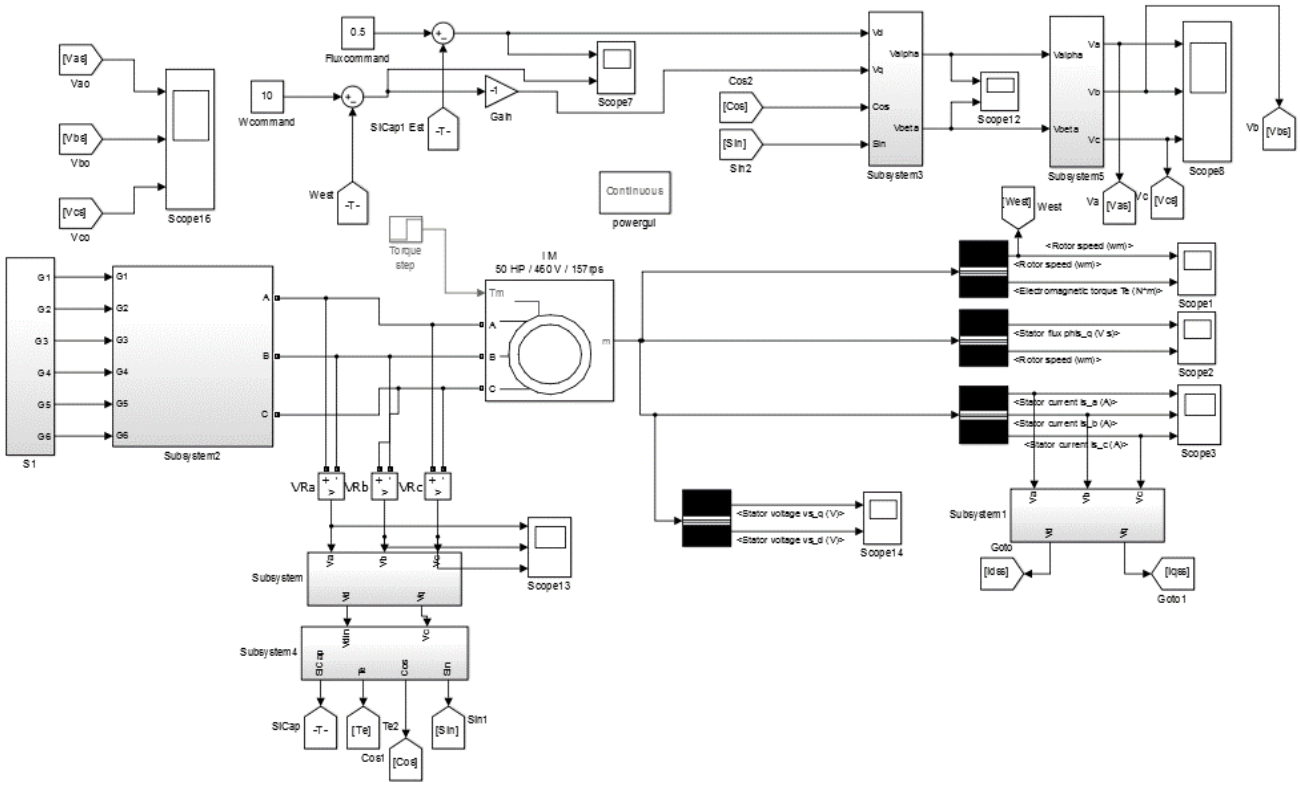

Fig. 10. FOC of Induction Motor with SPWM Inverter

IV. Vector Control For EPT Motor

Vector control is preferred or scalar control because vector control gives smooth control of induction motor its torque and speed control are independent of each other and during speed changing process transient are eliminated at considerable level.

By combining SPWM inverter and FOC we can achieved fine control of induction motor which can be shown in simulation.

From waveform shown in Fig. 11 we can understand that

(a) Starting of induction motor is very smooth which is good for electrical vehicle starting. Starting torque transient are considerably low.

(b) While changing the speed of induction motor the transients are also considerable low and at that moment speed transient are also very low.

(c) From torque waveform we can understand that, although ripple is high but it's frequency is very high so, that does not affect much to torque ripple as motor time constant is very high and are affected only by higher order harmonics.

Vector control is only method that gives speed torque performance as shown in figure independent with each other.

Finally, by analyzing above waveform we can say that vector control can applied for the EPT.

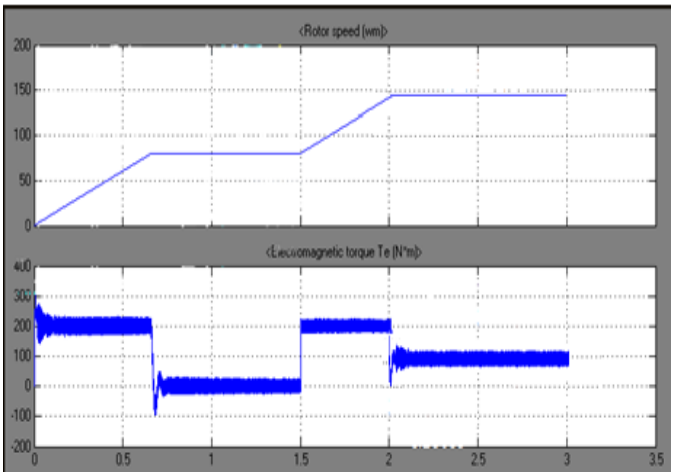

Fig. 11 Speed & Torque with FOC Vector Control

V. Conclusion

EPT that uses proposed control strategy can be used for EV, lifts, fork lift vehicle. The application that needs smooth speed and torque control and wide speed range can used proposed EPT control strategy. Vehicles those are used for transporting small loads or passenger transport vehicles that can range from in medium rating machine can used facility given by proposed EPT.

With proposed integration of power electronics devices we can achieved efficient speed control with reduced transient and low frequency torque ripple and losses can be reduced at DC-DC converter side by using MDIBC which is analyzed by comparing different DC-DC converter devices. The efficiency of EPT can be increases.

REFERENCES

[1] Woywode, O.; Güldner, H. "Application of Statistical Analysis to DC-DC Converter" International Power Electronics Conference, IPEC 2000, Tokyo, Japan 2000.

[2] A. Emadi, S. S.Williamson, and A. Khaligh, "Power electronics intensive solutions for advanced electric, hybrid electric, and fuel cell vehicular power systems," *IEEE Trans. Power Electron.*, vol. 21, no. 3, pp. 567–577, May 2006.

[3] Omar Hegazy and Joeri Van Mierlo, "Analysis, Modeling, and Implementation of a Multiservice Interleaved DC/DC Converter for Fuel Cell Hybrid Electric Vehicles", IEEE transactions on power electronics, Vol. 27, No. 11, November 2012.

[4] Omar Hegazy and Ricardo Barrero, Joeri Van Mierlo, "An Advanced Power Electronics Interface for Electric Vehicles Applications", IEEE transactions on power electronics, Vol. 28, No. 12, December 2013.

[5] Ned Mohan, "Power electronics and drives", MNPERE, 2001, Chapter No.3

[6] Muhammad H. Rashid, "Power Electronics Handbook", Academic Press, 2001, Chapter No.13.

[7] Bimal K. Bose, "Modern Power Electronics and AC Drive", Prentice Hall PTR, 2002, Chapter No.5

[8] Gopal K. Dubey, "Power Semiconductor Controlled Drives" Prentice Hall,1989,Page No.290

[9] Bimal K. Bose, "Modern Power Electronics and AC Drive", Prentice Hall PTR, 2002, Chapter No.8

[10] Peter Vas, "Senseless Vector and Direct Torque Control", Oxford Science Publisher, 1998, Chapter No.4

[11] Muhammad H. Rashid, "Power Electronic Handbook", Academic Press,2001,Page No. 219

[12] W. Yu, H. Qian, and J.-S. (Jason) Lai, "Design of high-efficiency bidirectional DC–DC converter and high-precision efficiency measurement," *IEEE Trans. Power Electron.*, vol. 25, no. 3, pp. 650–658, Mar. 2010. Dc-dc

[13] Anjana S, Jisha Kuruvila, Neetha Johna "Novel Multidevice Interleaved Boost Converter For Fuel Cell Hybrid Electric Vehicles" International Journal of Electrical, Electronics and Data Communication, April-2013

[14] Gopal K. Dubey, "Power Semiconductor Controlled Drives" Prentice Hall,1989,Page No.225

[15] Gopal K. Dubey, "Power Semiconductor Controlled Drives" Prentice Hall,1989,Page No.298

[16] Dr. P.S. Bimbhra,"Power Electronics", Khanna Publication 2008, Page No. 26

[17] Dr. P.S. Bimbhra,"Power Electronics", Khanna Publication 2008, Page No. 459