Investigation On Bolted Moment Connection In Cold Formed Rectangular Hollow Steel Section

P.Dileep Kumar, V.Mohan Krishna, M.Arun Kumar
Assistant Professor
NBKR Institute of Science & Technology, Nellore,India

Abstract: Cold-formed steel products are found in all aspects of modern life. The use of these products are multiple and varied, ranging from 'tin' cans to structural piling, from keyboard switches to mainframe building members. Nowadays, a multiplicity of widely different products, with a tremendous diversity of shapes, sizes and applications are produced in steel using the cold-forming process. In this paper presents, a brief in investigation on moment bolted connection in cold-formed rectangular hollow steel sections. A different types of moment connections are done by using stiffener plates and angle sections in different position of beam-column joint. The models of plane frame with moment bolted connection under uniform loading are analyzed by using FEM software package i.e ANSYS 13 WORKBENCH. The performance of moment connection is evaluated in terms of deformation, Von-Mises stresses and shear stresses

Key words - Cold-formed steel; Finite element analysis; Plane frame; tubular section; moment bolted connection

I. INTRODUCTION

In steel construction, there are two main families of structural members one is the familiar group of hot-rolled shapes and member built-up of plates. The other, less familiar but of growing importance is composed of sections cold formed from steel sheet, strip, plate, or flat bar in roll- forming machines or by press brake or bending brake operations. These are cold formed steel structural members. The thickness of steel sheet or strip are generally used cold- formed steel structural members ranges from 0.0149 in (0.378mm) to about ¼ in (6.34mm). Steel plates and bars are thick as one inch (25.4 mm) can be cold formed successfully into structural shapes

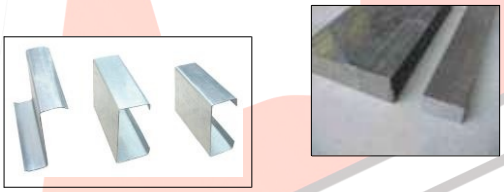

Fig.1 Hot rolled steel and cold-formed steel

Although cold formed steel sections are used in car bodies, railway coaches and various types of equipment, storage racks, grain bins, high way products, transmission poles, transmission towers, drainage facilities and bridge construction.

Cold-formed steel members are often has wide structural applications. Generally in construction industry cold formed structural members are joists, studs, floor decking and built-up sections. In past one decade cold formed steel framed sections like angles, channels with and without lips, Hat section, lipped Z sections, roof covering sheets, floor decking panels, curtain wall/ siding panels and C shapes, roof purlins are practice in steel building industry. Cold formed steel sections is also known as light gauge sections

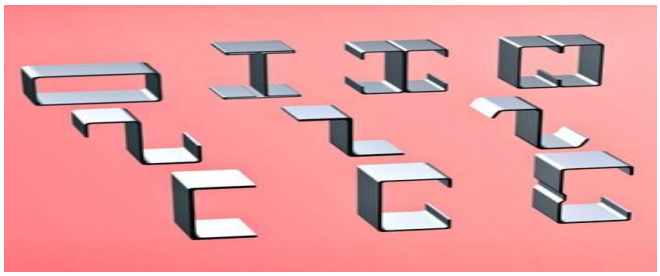

Fig.2 commonly used CFS sections.

In recent construction industry cold formed steel hollow sections simply called tubular sections (fig 2) are practiced in all major structural steel designs.

Fig.3 Tubular sections

In this paper rectangular hollow section is considered in both beam and column sections. Rectangular hallow section is stronger in bending. It has more stiffness and handling and erection can be less, lateral strength easy to pickup and more stable to erect and concrete poured into hallow steel tubular section, it gives greater strength.

Types of connections

Moment Connection

Moment connections are also called rigid connections. This connections carry a portion or the full moment capacity of the supported member thus preventing any end-rotation of the member. Moment connections are typically designed to also carry the shear component of the load. This connections provide continuity between the supported and supporting members. Moment connections are offering Relative rotation between the supporting and supported members is negligible. The flanges of the supported member are attached to either a connection element or directly to the supporting member.

Bolted Connection

Bolts may be used to be alone to transfer load or they may be used merely to hold the parts in firms contact while other devices (keys, timber connectors, or plugs) transfer the load. Bolts may be used in shear type connections or the load may have a tension component. In shear connections, load transfer by bearing (compression) of the bolt shank against the wood.

II. REVIEW OF LITERATURE

Ying Qin et al [1] are presented the experimental seismic behavior of through-diaphragm connections to concrete filled rectangular steel tubular columns. In this paper, four full-scale specimens of existing and proposed through-diaphragm connections to concrete filled rectangular steel tubular columns were tested under cyclic lateral load. The variables in the experiments include the geometry of the through-diaphragm, the configuration of the weld access whole, horizontal stiffeners, and the methods of connecting beam webs to columns. Three failure modes were observed in the test. The strength, stiffness, ductility and energy dissipation capacity were evaluated at different load cycles. It is found that the moment-rotation hysteresis curves are all stable and plentiful and exhibit no obvious strength deterioration or stiffness degradation.

Yeong huei lee et al [2]. are aims to review the previous research on cold-formed steel connections, namely screwed connections, storage rack connections, welded connections and bolted connections. The suitability of these connections in applying into cold-formed steel sections is studied.

Ben young, Ehab Ellobody [3] are presented a experimental investigation of concrete-filled cold-formed high strength stainless steel tube columns. The behavior of the columns was investigated using different concrete cylinder strengths varied from 40 to 80 Mpa. A series of tests was performed to investigate the effects of the shape of the stainless steel tube, plate thickness and concrete strength on the behavior and strength of concrete- filled high strength stainless steel tube columns. The high strength stainless steel tubes were cold-rolled into square and rectangular hollow sections. The concrete-filled high strength stainless steel tube specimens were subjected to uniform axial compression. The column strength, load-axial strain relationships and failure modes of column were studded.

Somadasa Wanniarachchi [4] done research paper is aimed to developing a new cold-formed steel beam with two torsionally rigid rectangular hallow flanges and a slender web formed using intermittent screw fastening to enhance the flexural capacity while maintain a minimum fabrication cost. This paper described a detailed investigation into the structural behavior of this new rectangular hallow flange beam, subjected to flexural action.

Gregryj.hancock, Xio-ling zhao [5] determined design rules for cold-formed steel square hallow sections and rectangular hallow sections. This can be used in the Australian limit state steel structural standard. These papers concentrate columns and beams. For long columns test have been performed on c350 square hallow steel sections to determine an appropriate column design curve for cold- formed tubular sections. For beams tested on plastic bending test, and performed to determine their plastic bending capacity.

Bayan Anwer Ali, Sariffuddin Saad, Mohd Hanim Osman[6] The beam and column members were formed b y single lipped channel sections connected back•to• back at the joints. A total of 10 frame tests were carried out under lat eral load with different stiffness of bolted moment connectio n between cold formed steel sections. It was found that th e stiffness and performance of the column base connect ions had significant effect on structural behavior of the fra mes. Furthermore, moment connections among cold formed steel members are structurally feasible and effective and eng ineers are encouraged to built light weight low to medium ri se moment frames with cold formed steel sections.

III. METHODOLOGY AND MODELLING

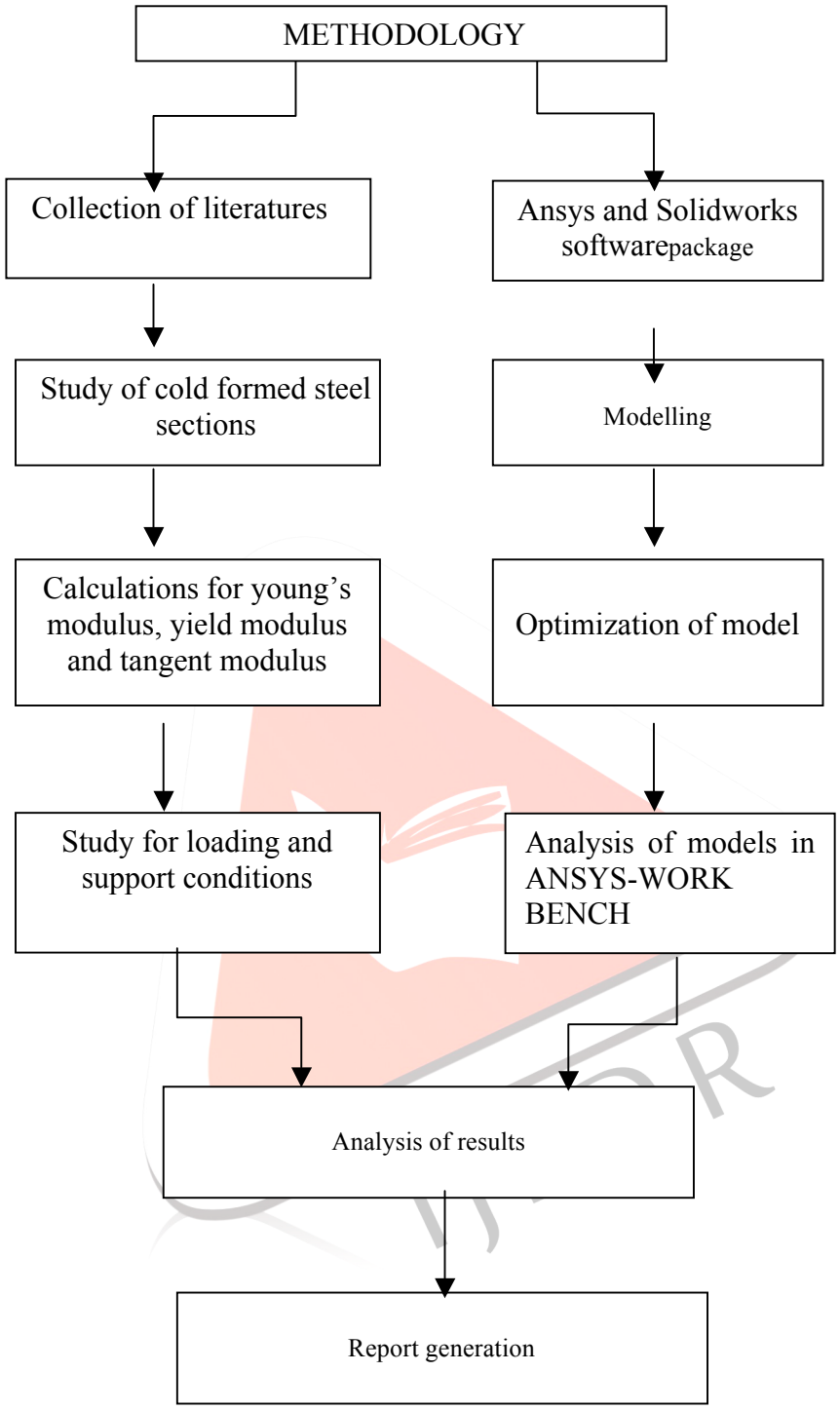

A. Design of geometry:

Model 1:

Here model contains gusset plates, L-Angles. Dimensions of gusset plates are 60x160mm and thickness of 5mm. the column and beam having dimensions 100x50x900mm which are covered with sockets are connected.

Fig 4: Model 1

.

Model 2:

Model contains gusset plates, L-Angles and cover plates. Here the column having dimension 50x100x900mm and beam having dimension 50x100x900 are connected with gusset plates and L-angles where both column and beam having sockets.

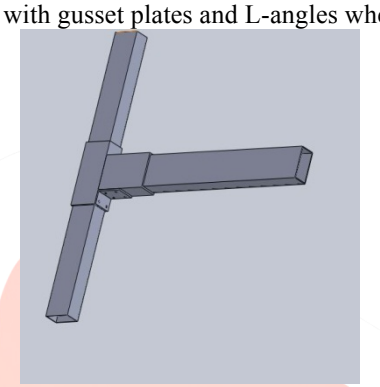

Fig 5: Model 2

B. Meshing:

Division of the domain into elements is called mesh. To obtain good results from the solid model is divided into small elements, and the use of hexagonal mapped mesh is recommended for fem analysis. Therefore, mesh was setup such that hexahedral elements were created. The meshing is done with mesh tool menu which has global set containing the size of the element divisions which defines the size of the element which is formed. As the size of the elements decreases the elements are increased in number which the results obtained are too accurate. As the elemental number increases the time consuming for solving a problem for the particular load increases thereby requires more memory space in the computer. Each element is assumed to be connected to the neighboring elements only at finite number of discrete points called nodes.

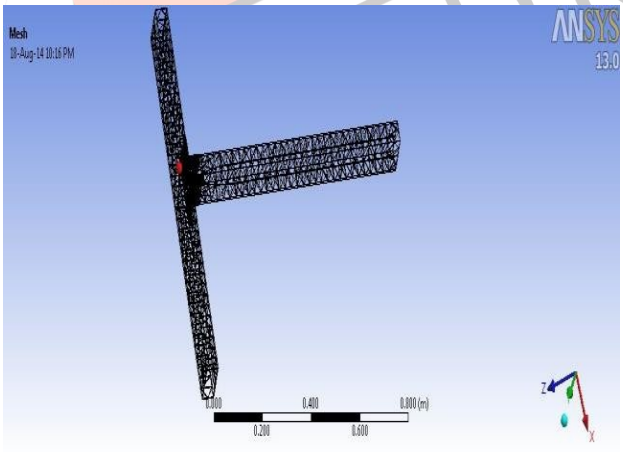

Fig 6: meshing

IV. Laoding Condition:

The load is applied at the the free end of the beam section as shown in the figure.

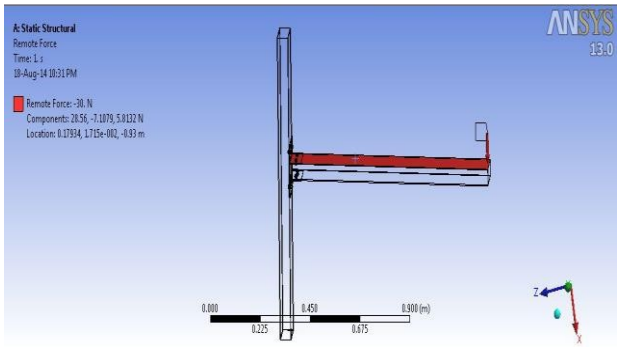

Fig 7: loading condition

V. RESULTS AND DISCUSSIONS

Analysis of the frame gives increasing moment at lower dimensions. Analysis is done for deformation, von-mises stress of frame by increasing load. Deformation, vonmises stress behavior of model 1 under 10 kN load as shown in figures below.

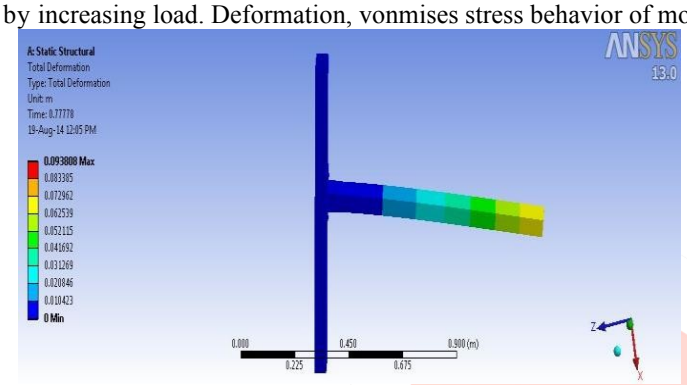

Fig 7: Deformation

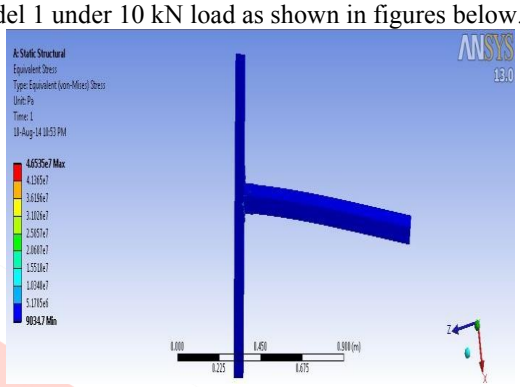

Fig 8: Von-mises stress

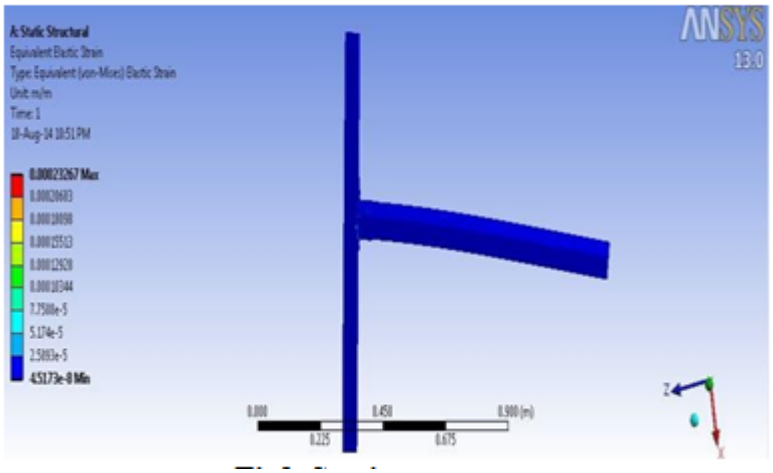

Fig 8:strain

The total deformation, equivalent stress and strain values of section at different loads i.e., 10 to 90kN loads are tabulated as below.

Model :01

S.No	Load (KN)	Deformation in mm	Normal stress*10^ 8 N/mm^2	Normal elastic strain*10^- 3in mm/mm
1	0	0	0	0
2	10	0.98048	1.4499	0.72496
3	20	1.961	2.8998	1.4499
4	30	2.914	4.3498	2.1749
5	40	4.0827	4.6349	2.3174
6	50	7.5434	5.052	2.526
7	60	20.0421	5.4048	2.7024
8	70	61.398	5.5018	2.7509
9	80	124.34	6.0199	3.01
10	90	196.78	7.311	3.6555

Model:02

S.no	Load (KN)	Deformation in mm	Normal stress*10^ 8 N/mm^2	Normal elastic strain*10^- 3in mm/mm
1	0	0	0	0
2	10	1.041	1.5257	0.76283
3	20	2.0821	3.0513	1.5257
4	30	3.1231	4.577	2.2885
5	40	4.618	6.5037	3.2518
6	50	9.8043	4.971	2.4855
7	60	35.67	4.9148	2.4574
8	70	84.653	5.174	2.587
9	80	157.71	6.5311	3.2655
10	90	238.77	7.9744	3.9872

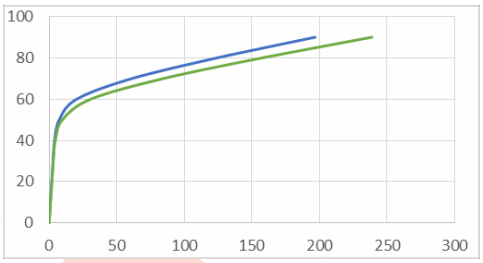

Fig 10: Deformation of Models

VI. CONCLUSIONS

From the above FEM analysis it is observed that the flange supported haunch stiffener type moment connection (mode01) has less deformation compare to model 2

Flange supported haunch stiffener type moment connection safely transfer moment and shear forces, this model controls the Von-Mises stress.

VII. REFERENCES

[1] Ying Qin et al. " Experimental seismic behavior of through-diaphragm connections to concrete-filled rectangular steel tubular columns", Journal of Constructional Steel Research, Issue 2014.

[2] Yeong Huei Lee et al. " Review on Cold-formed steel Connections"

[3] ,UTM Construction Research Centre, Issue 2010.

[4] Ben young, Ehab Ellobody ,Experimental investigation of concrete- filled cold-formed high strength stainless steel tube columns,2006.

[5] Somadasa Wanniarachchi Flexural behaviour and design of cold- formed steel beams with react angular flanges,2006

[6] Gregryj.hancock, Xio-ling zhao ,Research into the strenght of cold- formed tubular sections,2006